NOTE: ALL DIMENSIONS
IN INCHES

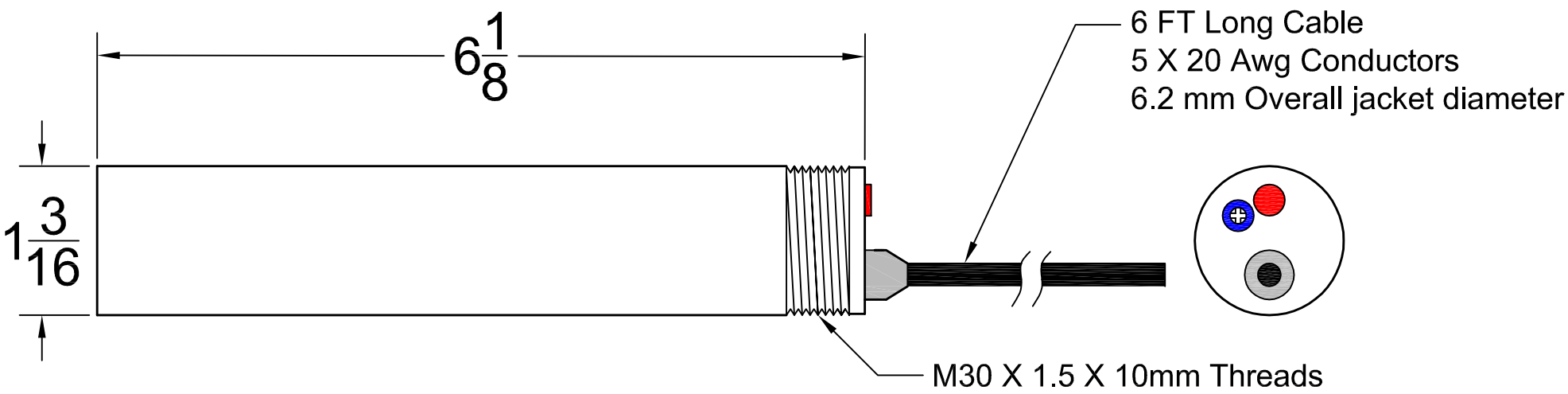

Change Note	Rev	Date	Drawn	Check	Brief Description

4B Components Limited
www.go4b.com
729 Sabrina Drive - East Peoria, IL 61611 USA
Tel: 309-698-5611 Fax: 309-698-5615 Email: 4b-usa@go4b.com

Customer: N/A

Description: BS1V4FC BINSWITCH

Sales Order #: N/A

Scale: NTS

Drawn By: DAVID BYARD
Date: 01/11/2010

Checked By: BRIAN KNAPP
Date: 02/17/2010

Drawing #: BS1V4FC

Rev: 0